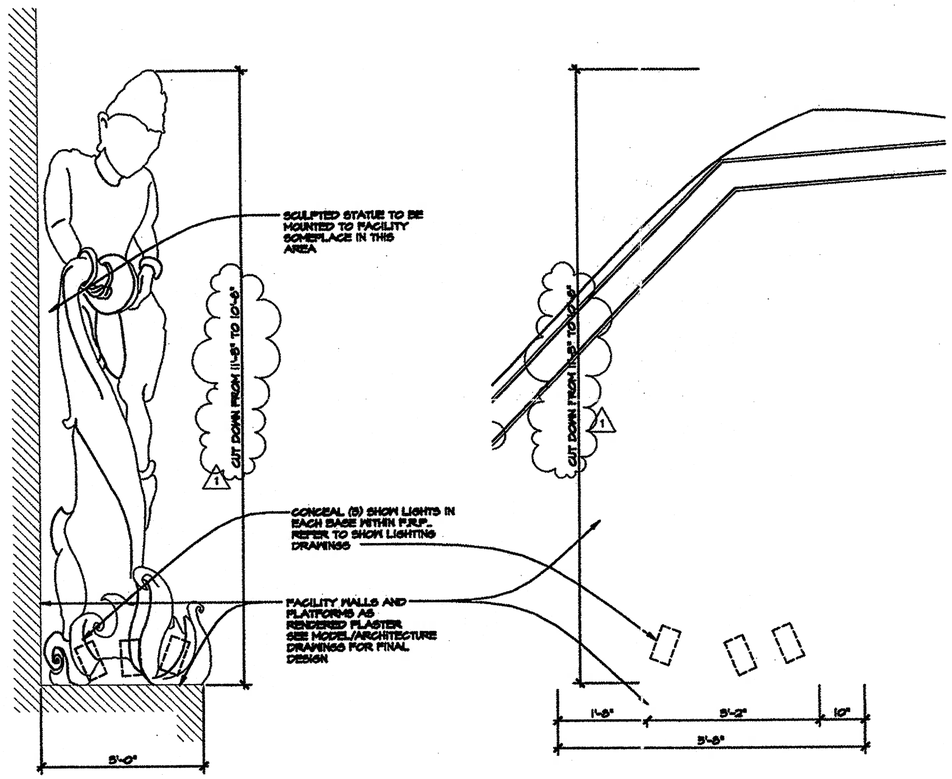

DETAIL: ELEVATION SCULPTURE B D-2-07 | D-2-07
SCALE: 1" = 1'-0"

DETAIL: ELEVATION SCULPTURE A D-2-07 | D-2-07
SCALE: 1" = 1'-0"

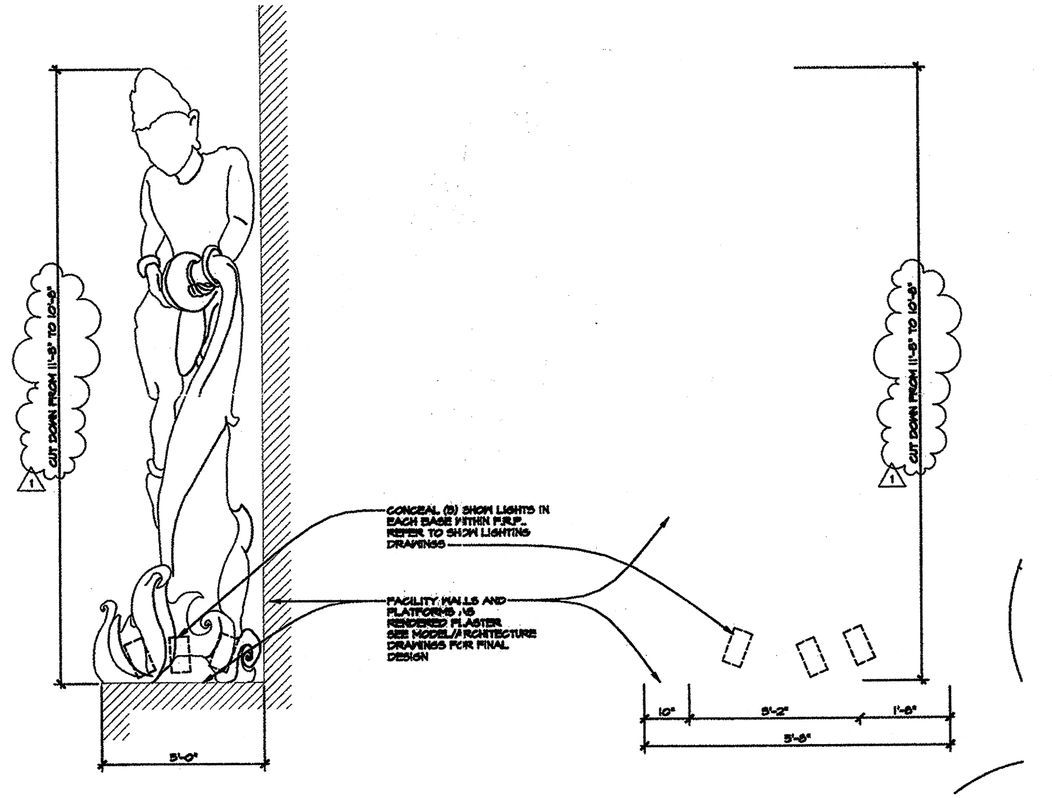

DETAIL: ELEVATION SCULPTURE B D-2-07 | D-2-07
SCALE: 1" = 1'-0"

DETAIL: ELEVATION SCULPTURE A D-2-07 | D-2-07
SCALE: 1" = 1'-0"

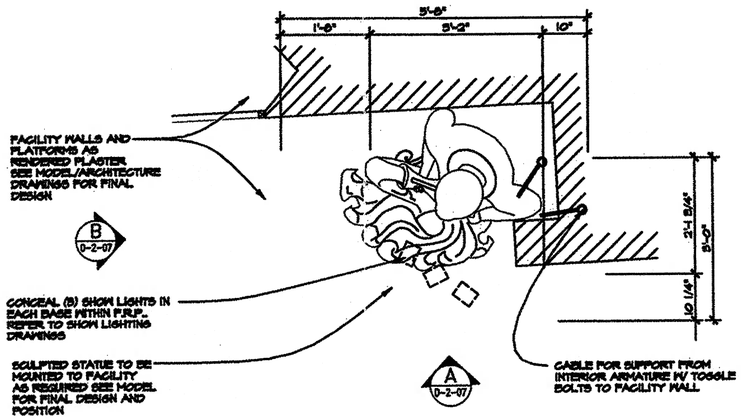

DETAIL: PLAN SCULPTURE 8 D-2-01 | D-2-07
SCALE: 1" = 1'-0"

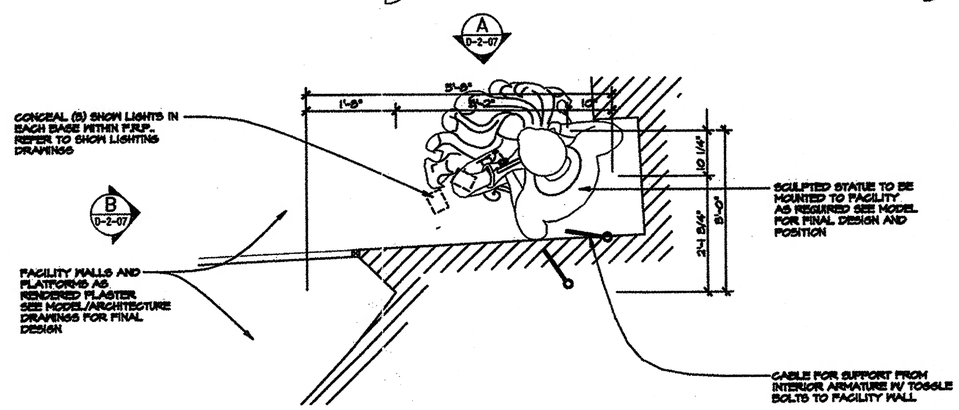

DETAIL: PLAN SCULPTURE 7 D-2-01 | D-2-07
SCALE: 1" = 1'-0"

GENERAL NOTES:

- SHOW SET DRAWINGS SERVE AS A COORDINATION TOOL DESCRIBING THE FORM AND DESIGN OF THE SHOW. FINAL FINISH AND CHARACTER IS DETERMINED BY THE ART DIRECTOR.
- REFER TO MODEL AND ILLUSTRATIONS FOR GENERAL ART DIRECTION AND INTENT (CHARACTER AND THEMING).
- REFER TO FACILITY DRAWINGS FOR CURRENT STRUCTURAL AND ARCHITECTURAL INFORMATION.

REV. NO.	DATE	DESCRIPTION OF REVISIONS
1	7/15/94	CUT -7" OFF BASE OF STATUE. FACILITY TOO LOW.
2	12/10/93	FACILITY COMPLETION PACKAGE
3	9/24/93	95% RELEASE FOR PRODUCTION

ISSUED FOR

NOTICES:

THE GAMA IN THIS DOCUMENT INCORPORATE PROPRIETARY RIGHTS OF WALT DISNEY IMAGINEERING, 1401 FLORIDA STREET, GLENDALE, CALIFORNIA 91221-0744 (818) 544-6500. THIS DOCUMENT IS TO BE USED ONLY FOR THE PURPOSE AND ADDRESS THAT IT SHALL NOT BE REPRODUCED IN WHOLE OR IN PART, NOR DISCLOSED TO OTHERS, WITHOUT THE WRITTEN CONSENT OF WD.I.P.E.I. ACT ENGINEERS.

CONTRACTOR SHALL VERIFY ALL CONDITIONS IN AN SITE & NOTIFY THE PROJECT ENGINEER OF ANY VARIANCE FROM DIMENSIONS SHOWN ON THESE DRAWINGS BEFORE PROCEEDING WITH ANY CONSTRUCTION.

KEY PERSONS AND APPROVALS

PROJECT MANAGER: DAVID TODD
PROJECT DESIGNER: VAL USLE
PROJECT ENGINEER: DAVID EDMINSTER
DESIGN: COMBS/BROWNE
CONCURRED:
APPROVED:
DATE: 9/24/93
T.F.DR.: D-2-07

WD.I.P.E.I. 1401 Flower Street Glendale, CA 91221-0660 (818) 544-6500

PROJECT DESIGNED FOR: Disneyland® ANAHEIM, CALIFORNIA

PROJECT AREA: ADVENTURELAND
UNIT NAME: INDIANA JONES EXPEDITIONS
W.B.S. NO.:
SHEET TITLE: SCENE 2: DETAILS SCULPTED STATUE
PHASE: CD
PROJECT CODE NUMBER:
DRAWING NO.: D-2-07R
REVISION NO.: 1

NAME: P:\SHARED\INDY\AF\DD\WP\SC2\OPEN.DWG DATE: DEC 09, 1993 TIME: 6:49 AM